CY3280-MBR

REV **

PCB: PDC-09587
PCA: 120-09587-0

CYPRESS SEMICONDUCTOR © 2010		
Title: CY3280-MBR		
Size: B	Document Number: REF-15089	Rev: **
Date: Tuesday, November 23, 2010	Sheet 1 of 3	

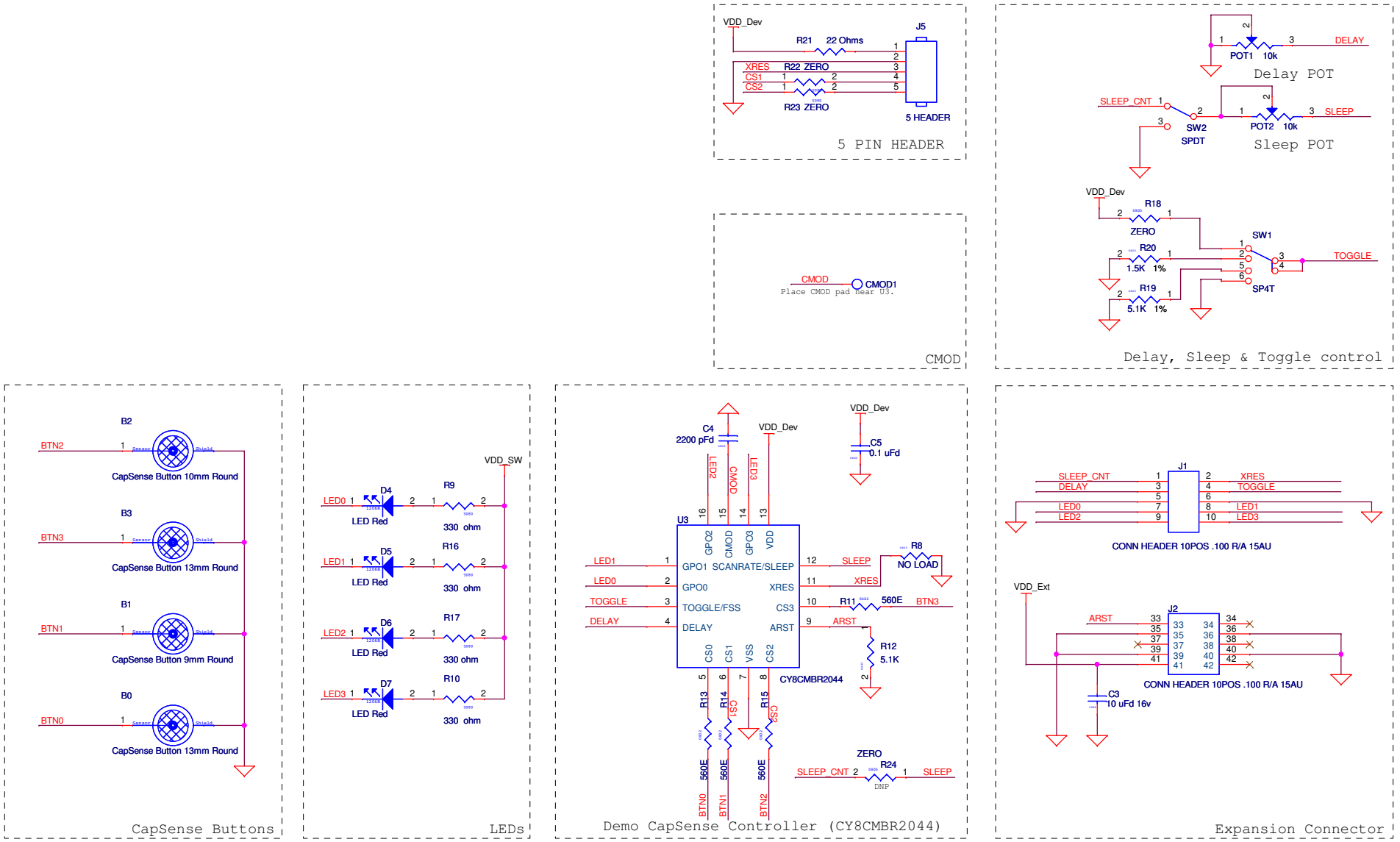

PCB: PDC-09587
PCA: 120-09587-0

CYPRESS SEMICONDUCTOR © 2010		
Title: CY3280-MBR		
Size: B	Document Number: REF-15089	Rev: **
Date: Tuesday, November 23, 2010	Sheet 2 of 3	

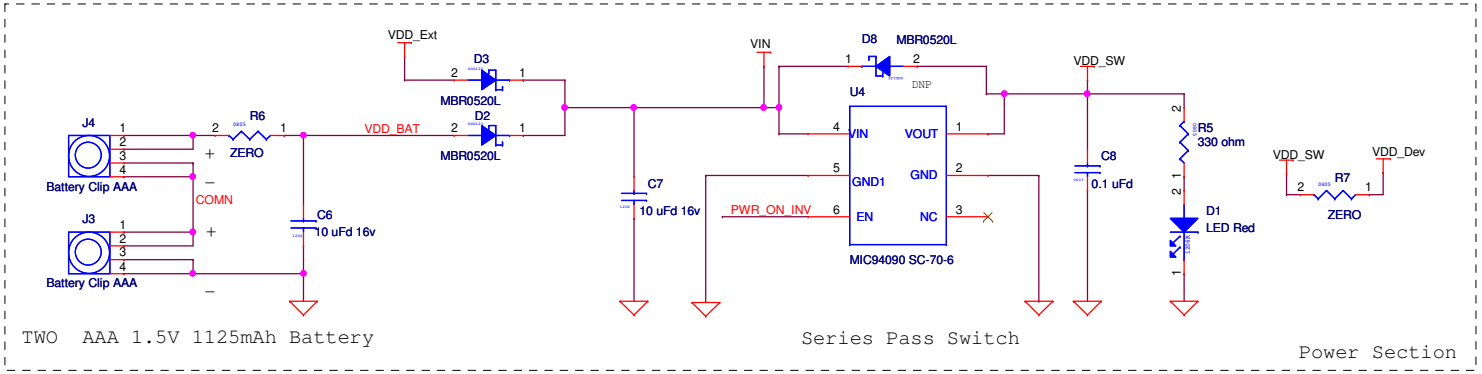

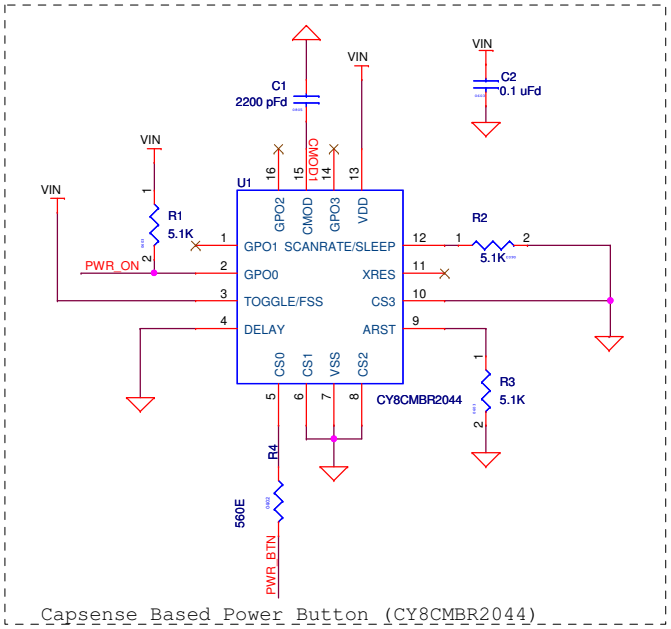

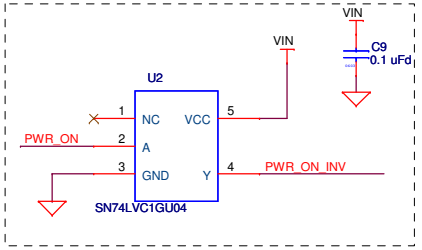

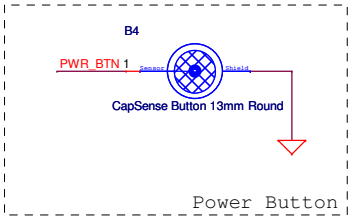

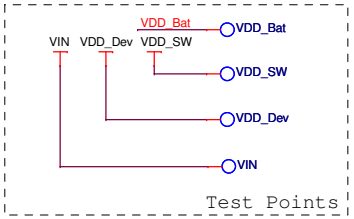

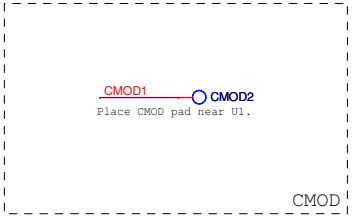

PCB: PDC-09587
PCA: 120-09587-0

CYPRESS SEMICONDUCTOR © 2010		
Title: CY3280-MBR		
Size: B	Document Number: REF-15089	Rev: **
Date: Tuesday, November 23, 2010	Sheet 3 of 3	